INORAX-ST
SERVER RACK CABINET

A cost effective server rack cabinet system developed for independent use and Data Center environments. Inorax-ST server rack cabinet system is designed and engineered for demanding Data Center environments. It is designed to house all servers manufactured by major brands including HP, Dell, Sun, Cisco, Juniper, IBM, Compaq to name but a few. To achieve optimum versatility within the server rack, users can set multiple depths throughout the cabinet by adjustable 19" mounting rails mounted on heavy duty side supports.

Horizontally divided side panels provide ease of access and convenient post-installation maintenance. Optional 80% perforations on front and rear doors enable optimum airflow within the rack cabinet. Optional cable tray channels can be fitted on top of the rack provides perfect cable routing eliminating the need for raised floor systems. Flat-pack option enables savings up to 60% in the transport cost and warehouse space

CERTIFIED

CERTIFIED

UP TO 1500 KG
MAX. STATIC LOAD

ASSEMBLED OR UNASSEMBLED
PACKAGING

RAL 9005
RAL 7035
COLOR

Technical Features

Material	0.8, 1.0, 1.2, 1.5, 2.0 mm Steel
Color	RAL 7035 or RAL 9005
Compliance	RoHS, UL Certified
Packaging	Assembled or unassembled
Maximum Static Load	Up to 1500 kg.
Finish	Frame, doors, side panels, top and bottom covers. Electrostatic Powder Paint, 19" mounting rails: Zinc-plated

Standard Configuration:

- Perforated front and rear doors, Free Air Ratio (FAR): %63 front & rear doors with swing handle Multi point-espagnolette
- Solid Side Panels with cylindrical locks and latches
- Internal top sheet with 3 cable entries for 800 width, 1 cable entry for 600 width racks and fan cut-outs
- 2 Pairs of depth adjustable heavy duty 19" Mounting Rails
- 2 Pairs of Adjustable Feet
- Bottom cover with 3 cable entries for 800 width, 1 cable entry for 600 width racks

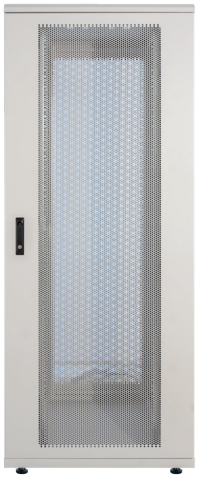

Front View

Front View Open

3/4 View

Side View

TECHNICAL DRAWING

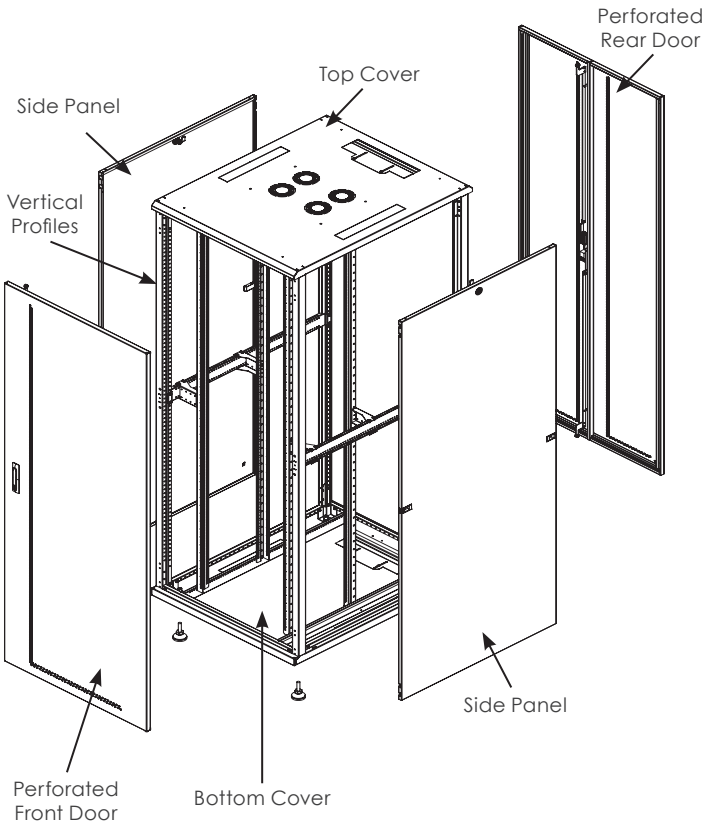

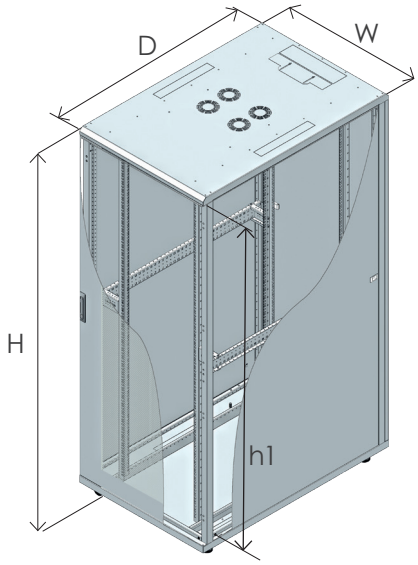

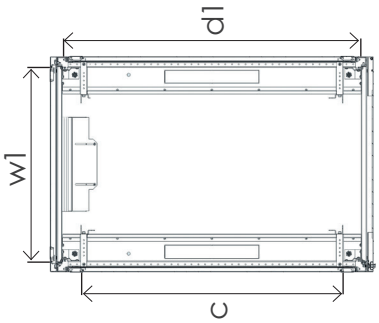

Height (U)	Outer Width (W) mm	Outer Depth (D) mm	Outer Height (H) mm	Inner Width (w1) mm	Inner Depth (d1) mm	Inner Height (h1) mm	19" Rails Adjustable Depth Range (c)	Weight (kg)	Part No
26U	600	1000	1322	503	950	1162	123 - 773	84	CSS-X-2660A
26U	600	1200	1322	503	1150	1162	123 - 973	96	CSS-X-2662A
36U	600	1000	1766	503	950	1607	123 - 773	105	CSS-X-3660A
36U	600	1200	1766	503	1150	1607	123 - 973	116	CSS-X-3662A
39U	800	1000	1900	703	950	1740	123 - 773	130	CSS-X-3980A
42U	600	1000	2033	503	950	1873	123 - 773	117	CSS-X-4260A
42U	600	1100	2033	503	1050	1873	123 - 873	123	CSS-X-4261A
42U	600	1200	2033	503	1150	1873	123 - 973	129	CSS-X-4262A
42U	800	1000	2033	703	950	1873	123 - 773	137	CSS-X-4280A
42U	800	1100	2033	703	1050	1873	123 - 873	144	CSS-X-4281A
42U	800	1200	2033	703	1150	1873	123 - 973	150	CSS-X-4282A
42U	1000	1000	2033	903	950	1873	123 - 773	157	CSS-X-4211A
47U	600	1000	2255	503	950	2095	123 - 773	127	CSS-X-4760A
47U	600	1100	2255	503	1050	2095	123 - 873	133	CSS-X-4761A
47U	600	1200	2255	503	1150	2095	123 - 973	139	CSS-X-4762A
47U	800	1000	2255	703	950	2095	123 - 773	147	CSS-X-4780A
47U	800	1100	2255	703	1050	2095	123 - 873	154	CSS-X-4781A
47U	800	1200	2255	703	1150	2095	123 - 973	162	CSS-X-4782A
47U	600	600	2255	503	550	2095	123 - 373	101	CSN-X-4766A
47U	600	800	2255	503	750	2095	123 - 573	114	CSN-X-4768A
47U	600	1000	2255	503	950	2095	123 - 773	123	CSN-X-4760A
47U	800	800	2255	703	750	2095	123 - 573	131	CSN-X-4788A
47U	800	1000	2255	703	950	2095	123 - 773	144	CSN-X-4780A

X (Color code): 7:RAL 7035 Light Grey, 9:RAL 9005 Black

COMPONENTS OF INORAX-ST RACK CABINETS

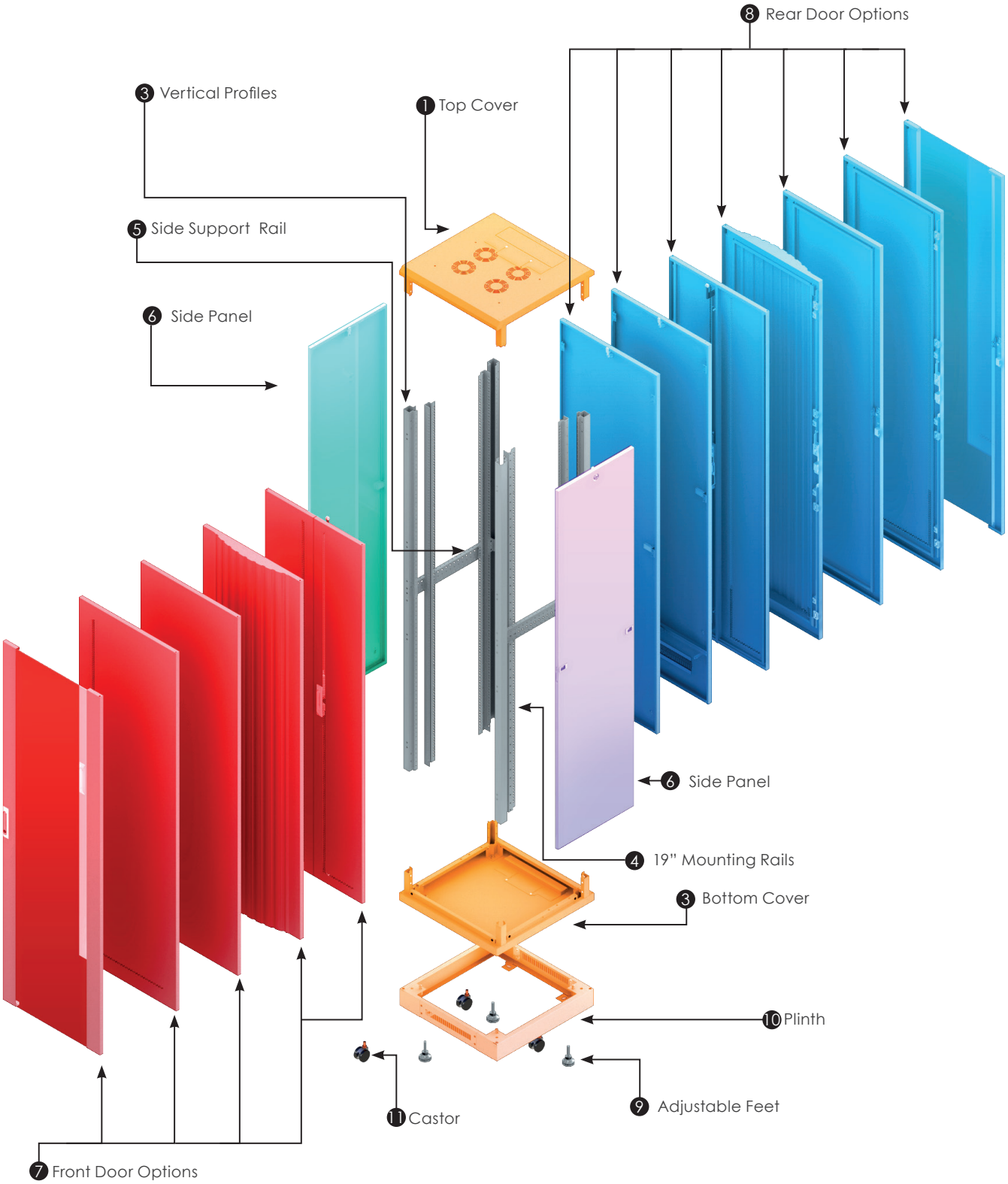

1 - Top Cover	7 - Front Door Options
2 - Bottom Cover	8 - Rear Door Options
3 - 19" Mounting Rails	9 - Adjustable Feet
4 - 19" Mounting Rails	10 - Plinth
5 - Side Support Rails	11 - Castor (optional)
6 - Side Panel	

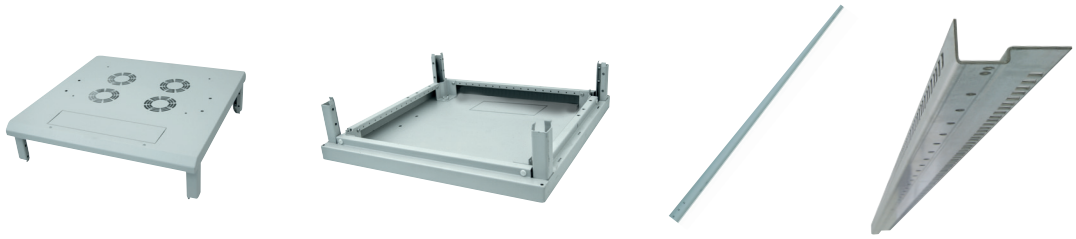

00-00

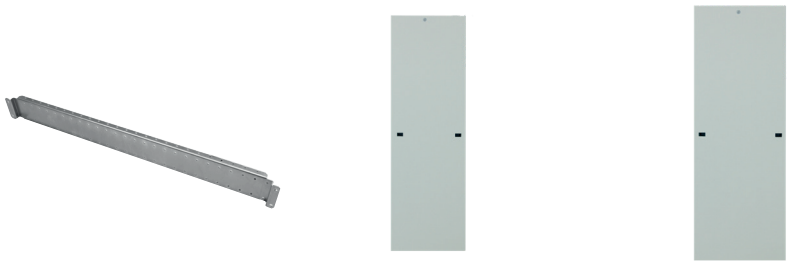

00-00

00-00

00-00

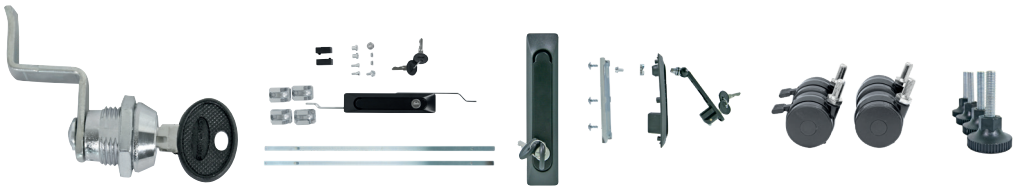

00-00

TOP COVER

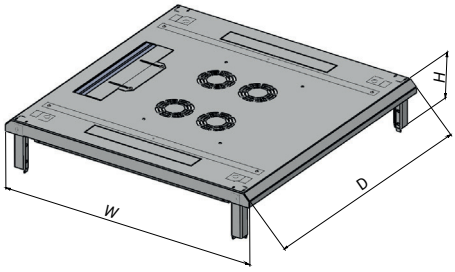

Top Cover Options

Material	1.5 mm Steel
Color	RAL 7035 and RAL 9005
Finish	Electrostatic Powder Paint

W (mm)	D (mm)	H (mm)	Weight (kg)	Part No
600	600	154	11	CSZ-X-YY660-0401
600	800	154	13	CSZ-X-YY680-0401
600	1000	154	15	CSZ-X-YY600-0401
600	1100	154	15	CSZ-X-YY610-0401
600	1200	154	16	CSZ-X-YY620-0401
800	800	154	17	CSZ-X-YY880-0401
800	1000	154	20	CSZ-X-YY800-0401
800	1100	154	21	CSZ-X-YY810-0401
800	1200	154	22	CSZ-X-YY820-0401

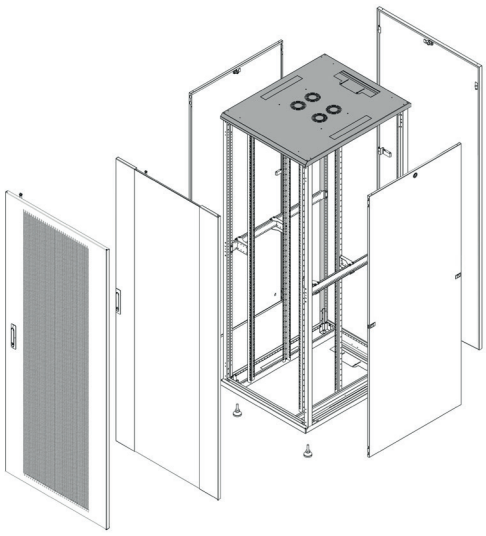

BOTTOM COVER

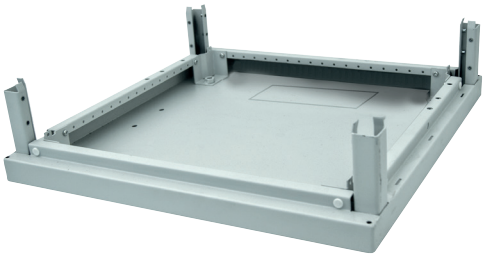

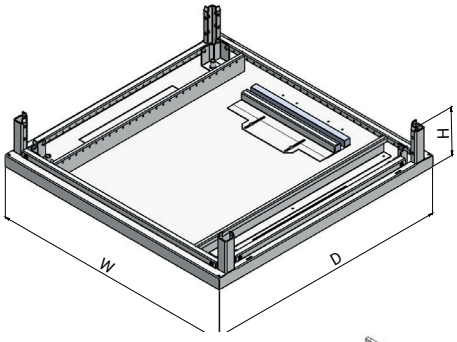

Top Cover Options

Material	1.5 mm Steel
Color	RAL 7035 and RAL 9005
Finish	Electrostatic Powder Paint

W (mm)	D (mm)	H (mm)	Weight (kg)	Part No
600	600	154	11	CSZ-X-YY660-0403
600	800	154	13	CSZ-X-YY680-0403
600	1000	154	15	CSZ-X-YY600-0403
600	1100	154	16	CSZ-X-YY610-0403
600	1200	154	17	CSZ-X-YY620-0403
800	800	154	17	CSZ-X-YY880-0403
800	1000	154	20	CSZ-X-YY800-0403
800	1100	154	21	CSZ-X-YY810-0403
800	1200	154	23	CSZ-X-YY820-0403

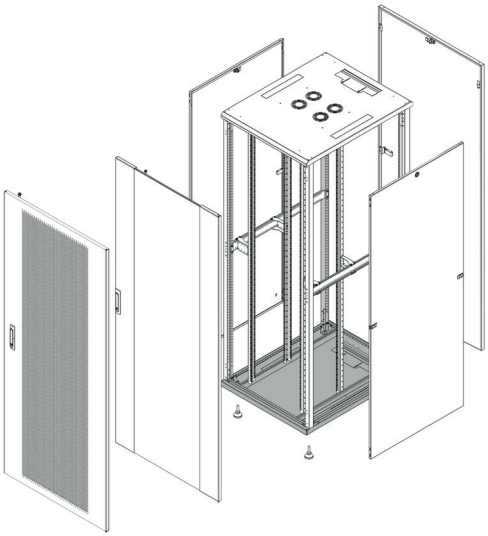

X (Color code): 7:RAL 7035 Light Grey, 9:RAL 9005 Black

VERTICAL PROFILES

Material	1.5 mm Steel
Color	RAL 7035 and RAL 9005
Finish	Electrostatic Powder Paint

H (U)	W (mm)	D (mm)	H (mm)	Weight (kg)	Part No
16U	48,5	57	754	1,4	CSZ-X-16YY0-0300
22U	48,5	57	1021	1,8	CSZ-X-22YY0-0300
26U	48,5	57	1199	2,2	CSZ-X-26YY0-0300
32U	48,5	57	1465	2,6	CSZ-X-32YY0-0300
36U	48,5	57	1643	2,9	CSZ-X-36YY0-0300
39U	48,5	57	1777	3,2	CSZ-X-39YY0-0300
42U	48,5	57	1910	3,5	CSZ-X-42YY0-0300
47U	48,5	57	2132	3,8	CSZ-X-47YY0-0300

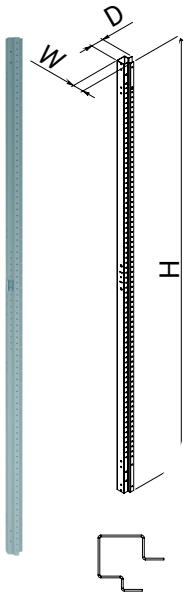

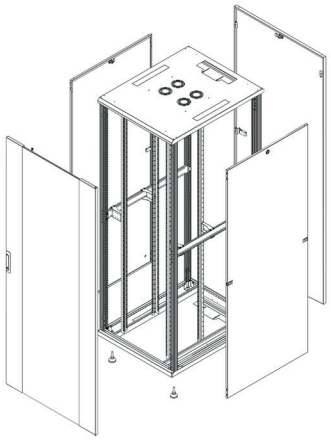

19" MOUNTING RAIL

Material	2.0 mm Steel
Color	Zinc-Plated

H (U)	W (mm)	D (mm)	H (mm)	Weight (kg)	Part No
16U	33	52	753	1	CSZ-0-16YY0-0600
22U	33	52	1020	1,3	CSZ-0-22YY0-0600
26U	33	52	1198	1,5	CSZ-0-26YY0-0600
32U	33	52	1464	1,8	CSZ-0-32YY0-0600
36U	33	52	1642	2	CSZ-0-36YY0-0600
39U	33	52	1776	2,2	CSZ-0-39YY0-0600
42U	33	52	1909	2,4	CSZ-0-42YY0-0600
47U	33	52	2131	2,7	CSZ-0-47YY0-0600

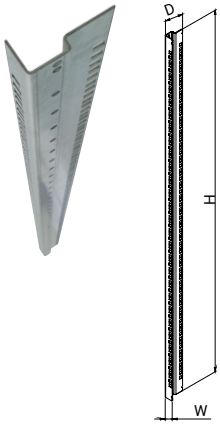

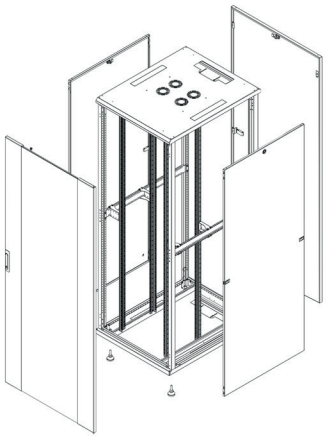

SIDE SUPPORT RAILS

Material	2 mm Steel
Color	Zinc-Plated

Cabinet W (mm)	Cabinet D (mm)	Weight (kg)	Part No
600	600	0,7	CSZ-0-YY660-0700
600	800	0,8	CSZ-0-YY680-0700
600	1000	0,8	CSZ-0-YY600-0700
600	1100	0,9	CSZ-0-YY610-0700
600	1200	0,9	CSZ-0-YY620-0700
800	800	0,8	CSZ-0-YY880-0700
800	1000	0,9	CSZ-0-YY800-0700
800	1100	1	CSZ-0-YY810-0700
800	1200	1	CSZ-0-YY820-0700

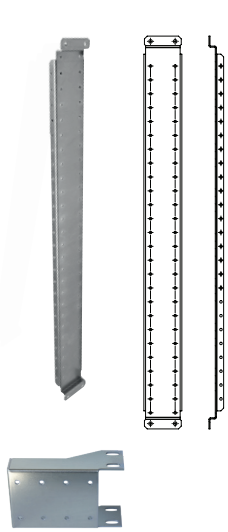

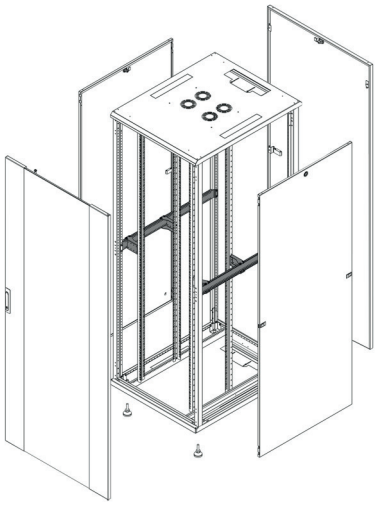

X (Color code): 7:RAL 7035 Light Grey, 9:RAL 9005 Black

SIDE PANEL

Material	0.8 mm Steel
Color	RAL 7035 and RAL 9005
Finish	Electrostatic Powder Paint

H (U)	W (mm)	D (mm)	H (mm)	Part No
16U	600	22	749	CSZ-X-16Y60-0501
22U	600	22	1016	CSZ-X-22Y60-0501
22U	800	22	1016	CSZ-X-22Y80-0501
26U	600	22	1194	CSZ-X-26Y60-0501
26U	800	22	1194	CSZ-X-26Y80-0501
26U	1000	22	1194	CSZ-X-26Y00-0501
32U	600	22	1460	CSZ-X-32Y60-0501
32U	800	22	1460	CSZ-X-32Y80-0501
36U	600	22	1638	CSZ-X-36Y60-0501
36U	800	22	1638	CSZ-X-36Y80-0501
36U	1000	22	1638	CSZ-X-36Y00-0501
36U	1200	22	1638	CSZ-X-36Y20-0501
39U	800	22	1772	CSZ-X-39Y80-0501
39U	1000	22	1772	CSZ-X-39Y00-0501
42U	600	22	1905	CSZ-X-42Y60-0501
42U	800	22	1905	CSZ-X-42Y80-0501
42U	1000	22	1905	CSZ-X-42Y00-0501
42U	1100	22	1905	CSZ-X-42Y10-0501
42U	1200	22	1905	CSZ-X-42Y20-0501
47U	600	22	2127	CSZ-X-47Y60-0501
47U	800	22	2127	CSZ-X-47Y80-0501
47U	1000	22	2127	CSZ-X-47Y00-0501
47U	1100	22	2127	CSZ-X-47Y10-0501
47U	1200	22	2127	CSZ-X-47Y20-0501

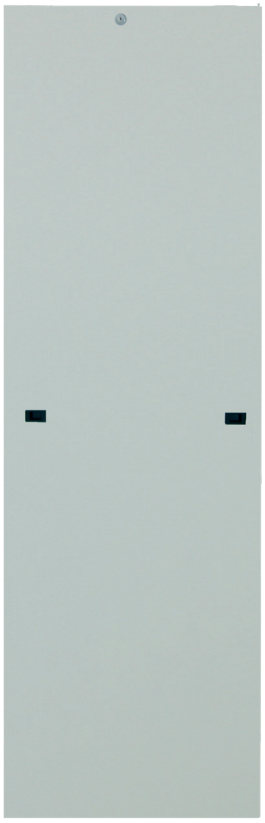

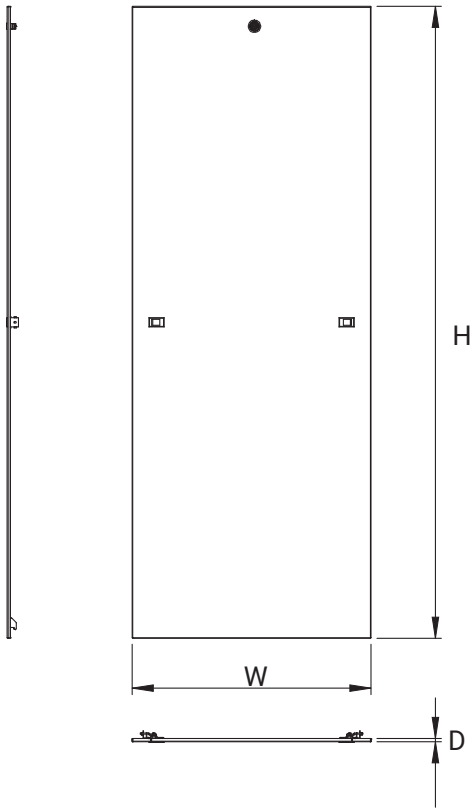

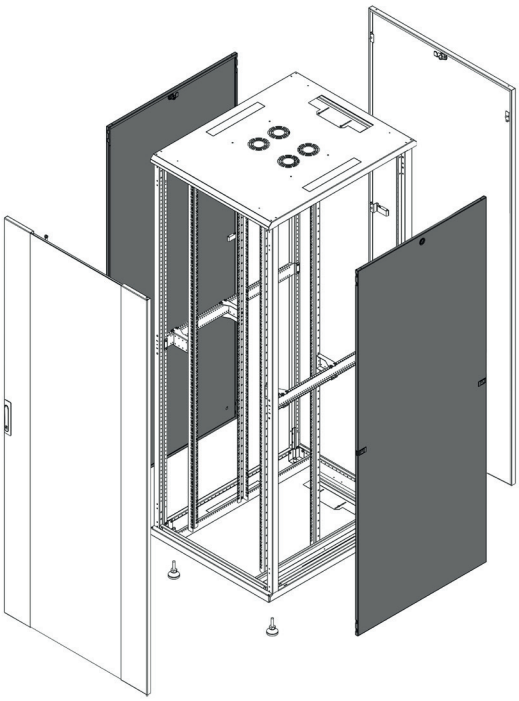

X (Color code): 7:RAL 7035 Light Grey, 9:RAL 9005 Black

REAR METAL SOLID PANEL

Material	0.8 mm Steel
Color	RAL 7035 and RAL 9005
Finish	Electrostatic Powder Paint

H (U)	W (mm)	D (mm)	H (mm)	Weight (kg)	Part No
16U	600	23	752	5	CSZ-X-166Y0-0901
22U	600	23	1018	7	CSZ-X-226Y0-0901
22U	800	23	1018	9	CSZ-X-228Y0-0901
26U	600	23	1196	8	CSZ-X-266Y0-0901
26U	800	23	1196	10	CSZ-X-268Y0-0901
32U	600	23	1463	10	CSZ-X-326Y0-0901
32U	800	23	1463	12	CSZ-X-328Y0-0901
36U	600	23	1641	11	CSZ-X-366Y0-0901
36U	800	23	1641	14	CSZ-X-368Y0-0901
39U	800	23	1774	15	CSZ-X-398Y0-0901
42U	600	23	1907	12	CSZ-X-426Y0-0901
42U	800	23	1907	16	CSZ-X-428Y0-0901
47U	600	23	2130	14	CSZ-X-476Y0-0901
47U	800	23	2130	18	CSZ-X-478Y0-0901

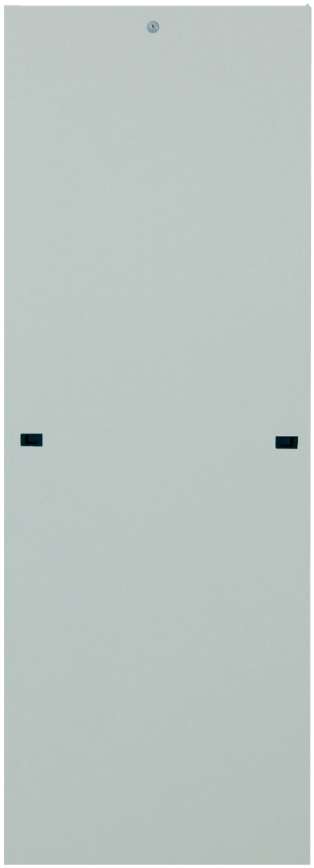

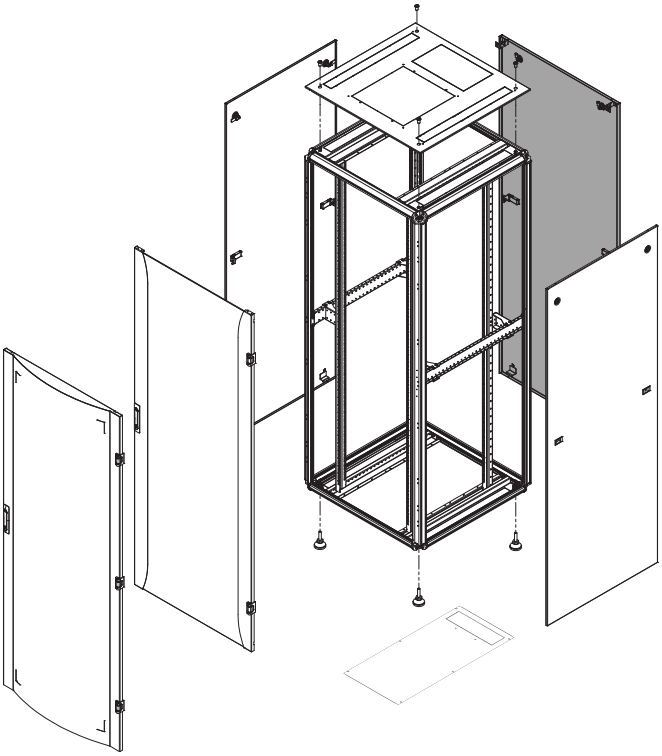

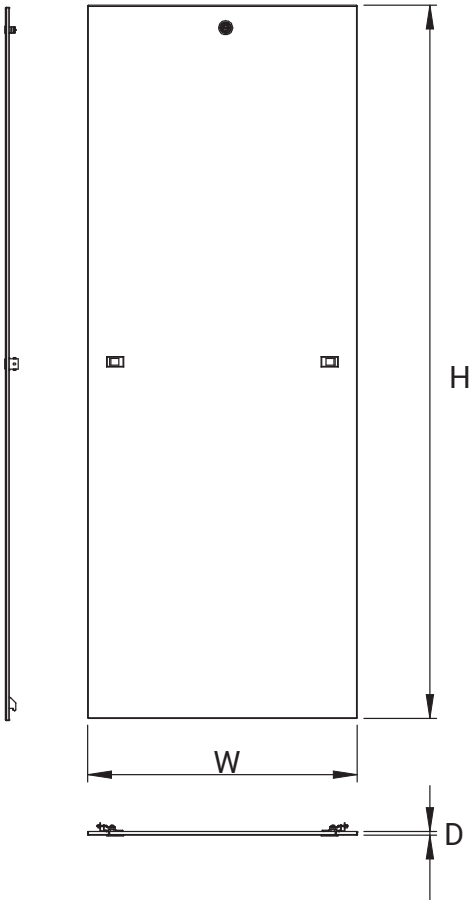

X (Color code): 7:RAL 7035 Light Grey, 9:RAL 9005 Black

SINGLE DOOR OPTIONS

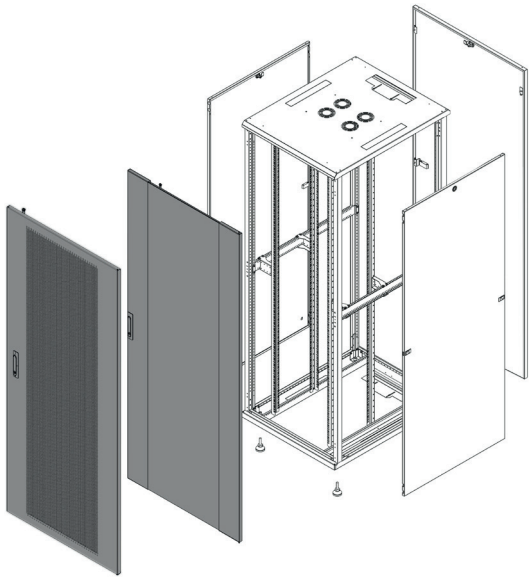

METAL SOLID DOOR

Material	1.2 mm Steel
Color	RAL 7035 and RAL 9005
Finish	Electrostatic Powder Paint

H (U)	W (mm)	D (mm)	H (mm)	Weight (kg)	Part No
16U	600	22	749	7	CSZ-X-166Y0-0902
22U	600	22	1016	9	CSZ-X-226Y0-0902
22U	800	22	1016	11	CSZ-X-228Y0-0902
26U	600	22	1194	10	CSZ-X-266Y0-0902
26U	800	22	1194	13	CSZ-X-268Y0-0902
32U	600	22	1460	12	CSZ-X-326Y0-0902
32U	800	22	1460	15	CSZ-X-328Y0-0902
36U	600	22	1638	14	CSZ-X-366Y0-0902
36U	800	22	1638	17	CSZ-X-368Y0-0902
39U	800	22	1772	18	CSZ-X-398Y0-0902
42U	600	22	1905	16	CSZ-X-426Y0-0902
42U	800	22	1905	20	CSZ-X-428Y0-0902
47U	600	22	2127	17	CSZ-X-476Y0-0902
47U	800	22	2127	22	CSZ-X-478Y0-0902

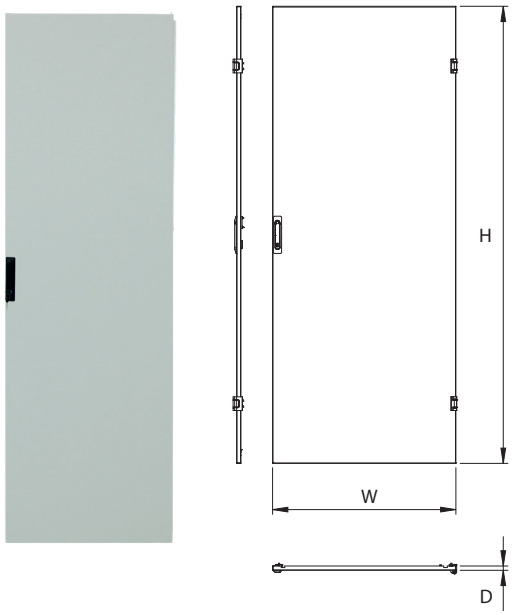

GLASS DOOR

Material	1.2 mm Steel
Color	RAL 7035 and RAL 9005
Finish	Electrostatic Powder Paint

H (U)	W (mm)	D (mm)	H (mm)	Weight (kg)	Part No
16U	600	22	749	5	CSZ-X-166Y0-0903
22U	600	22	1016	7	CSZ-X-226Y0-0903
22U	800	22	1016	10	CSZ-X-228Y0-0903
26U	600	22	1194	9	CSZ-X-266Y0-0903
26U	800	22	1194	11	CSZ-X-268Y0-0903
32U	600	22	1460	11	CSZ-X-326Y0-0903
32U	800	22	1460	14	CSZ-X-328Y0-0903
36U	600	22	1638	12	CSZ-X-366Y0-0903
36U	800	22	1638	15	CSZ-X-368Y0-0903
39U	800	22	1772	17	CSZ-X-398Y0-0903
42U	600	22	1905	14	CSZ-X-426Y0-0903
42U	800	22	1905	18	CSZ-X-428Y0-0903
47U	600	22	2127	15	CSZ-X-476Y0-0903
47U	800	22	2127	20	CSZ-X-478Y0-0903

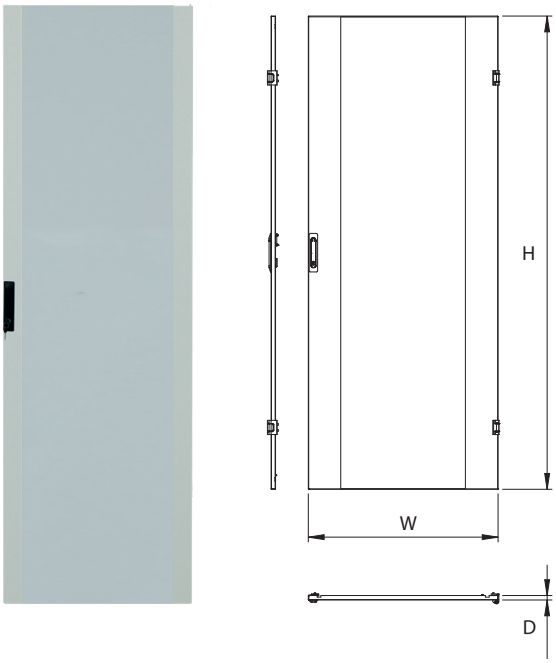

X (Color code): 7:RAL 7035 Light Grey, 9:RAL 9005 Black

PERFORATED FLAT DOOR

Material	1.0 mm Steel
Perforation Rate	63%
Color	RAL 7035 and RAL 9005
Finish	Electrostatic Powder Paint

H (U)	W (mm)	D (mm)	H (mm)	Weight (kg)	Part No
26U	600	22	1194	8	CSZ-X-266Y0-0904
36U	600	22	1638	10	CSZ-X-366Y0-0904
39U	800	22	1772	14	CSZ-X-398Y0-0904
42U	600	22	1905	12	CSZ-X-426Y0-0904
42U	800	22	1905	15	CSZ-X-428Y0-0904
47U	600	22	2127	13	CSZ-X-476Y0-0904
47U	800	22	2127	17	CSZ-X-478Y0-0904

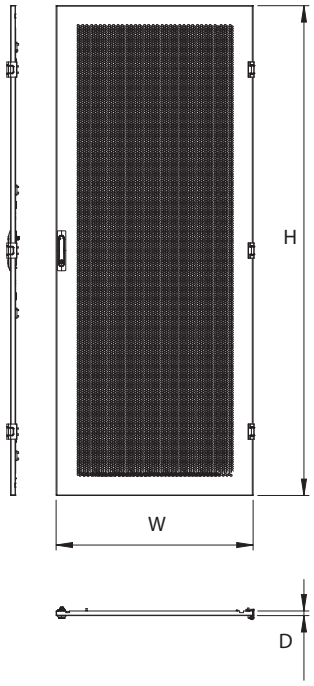

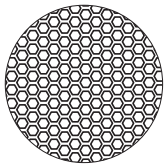

65%
Perforation Detail

HIGH PERFORATION RATED FLAT DOOR

Material	1.0 mm Steel
Perforation Rate	80%
Color	RAL 7035 and RAL 9005
Finish	Electrostatic Powder Paint

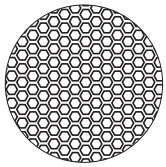

80%
Perforation Detail

H (U)	W (mm)	D (mm)	H (mm)	Weight (kg)	Part No
26U	600	22	1194	7	CSZ-X-266Y0-0909
36U	600	22	1638	10	CSZ-X-366Y0-0909
39U	800	22	1772	14	CSZ-X-398Y0-0909
42U	600	22	1905	11	CSZ-X-426Y0-0909
42U	800	22	1905	15	CSZ-X-428Y0-0909
47U	600	22	2127	13	CSZ-X-476Y0-0909
47U	800	22	2127	16	CSZ-X-478Y0-0909

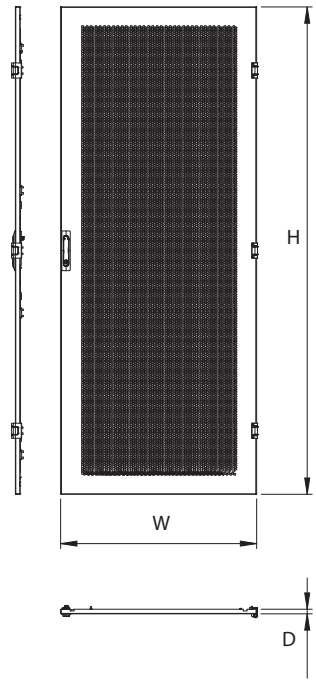

X (Color code): 7:RAL 7035 Light Grey, 9:RAL 9005 Black

DOUBLE DOOR OPTIONS

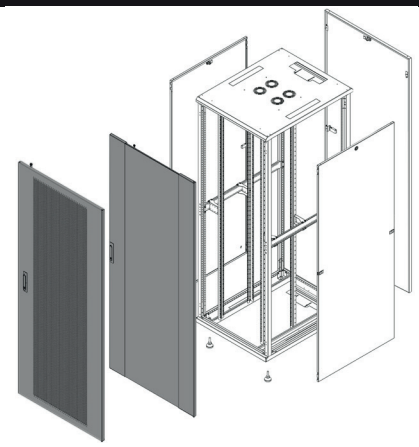

DOUBLE PERFORATED DOOR

Material	1.0 mm Steel
Perforation Rate	63%
Color	RAL 7035 and RAL 9005
Finish	Electrostatic Powder Paint

H (U)	W (mm)	D (mm)	H (mm)	Weight (kg)	Part No
26U	600	22	1194	12	CSZ-X-266Y0-0908
36U	600	22	1638	16	CSZ-X-366Y0-0908
39U	800	22	1772	21	CSZ-X-398Y0-0908
42U	600	22	1905	18	CSZ-X-426Y0-0908
42U	800	22	1905	23	CSZ-X-428Y0-0908
47U	600	22	2127	20	CSZ-X-476Y0-0908
47U	800	22	2127	25	CSZ-X-478Y0-0908

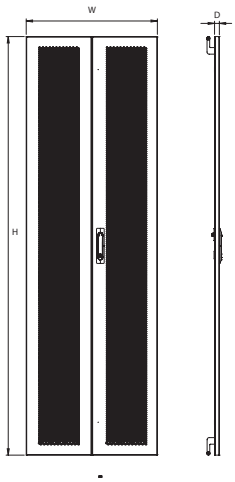

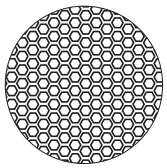

65%
Perforation Detail

HIGH PERFORATION RATED DOUBLE DOOR

Material	1.0 mm Steel
Perforation Rate	80%
Color	RAL 7035 and RAL 9005
Finish	Electrostatic Powder Paint

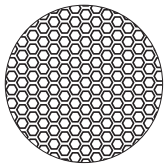

80%Perforation
Detail

H (U)	W (mm)	D (mm)	H (mm)	Weight (kg)	Part No
26U	600	22	1194	12	CSZ-X-266Y0-0911
36U	600	22	1638	15	CSZ-X-366Y0-0911
39U	800	22	1772	21	CSZ-X-398Y0-0911
42U	600	22	1905	18	CSZ-X-426Y0-0911
42U	800	22	1905	22	CSZ-X-428Y0-0911
47U	600	22	2127	20	CSZ-X-476Y0-0911
47U	800	22	2127	25	CSZ-X-478Y0-0911

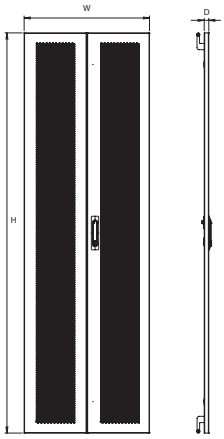

X (Color code): 7:RAL 7035 Light Grey, 9:RAL 9005 Black

REAR METAL PANEL WITH CABLE ENTRY

Material	0.8 mm Steel
Color	RAL 7035 and RAL 9005
Finish	Electrostatic Powder Paint

H (U)	W (mm)	D (mm)	H (mm)	Weight (kg)	Part No
3U	600	23	133	0,97	CSZ-X-036Y0-0915
3U	800	23	133	1,35	CSZ-X-038Y0-0915
4U	600	23	177	1,24	CSZ-X-046Y0-0915
4U	800	23	177	1,71	CSZ-X-048Y0-0915
5U	600	23	222	1,52	CSZ-X-056Y0-0915
5U	800	23	222	2,06	CSZ-X-058Y0-0915
6U	600	23	266	1,79	CSZ-X-066Y0-0915
6U	800	23	266	2,42	CSZ-X-068Y0-0915

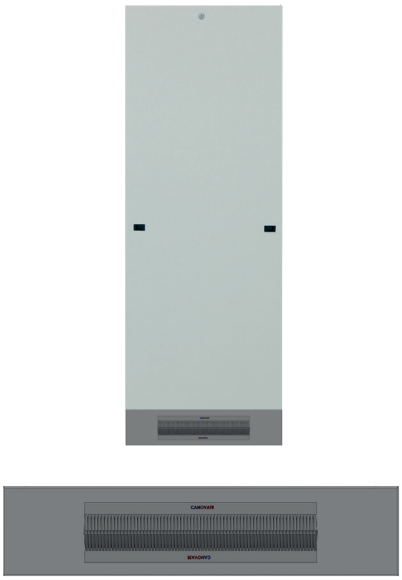

ADJUSTABLE CABLE ENTRY PANEL WITH EPDM GASKET

Material	1.0 mm Steel
Color	RAL 7035 and RAL 9005
Finish	Electrostatic Powder Paint

W (mm)	D (mm)	H (mm)	Weight (kg)	Part No
350	152	20	0,53	CSZ-X-YYYY0-0803

ADJUSTABLE FEET

Material	Steel and Plastic ABS
Packaging	4 pieces in a box
Finish	Zinc Plated

Maximum Static Load	Set Weight kg	Part No
600 kg / piece	0,35	CCA-0-7014

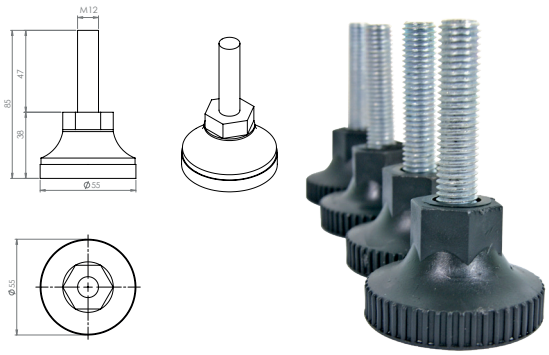

CASTOR SET

Material	Steel and Plastic ABS
Packaging	2 pcs with stopper and 2 pcs without Stopper in a box
Finish	Zinc Plated

Maximum Static Load	Set Weight kg	Part No
75 kg / piece	0,77	CCA-0-7015

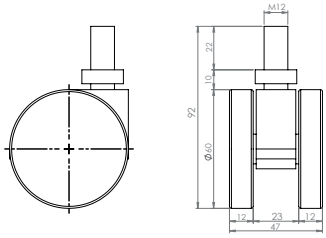

MULTI POINT LOCK FOR DOUBLE DOORS

Material	Steel, Polyamide
Packaging	1 piece in a box
Part No	CSZ-0-YYYY0-1005

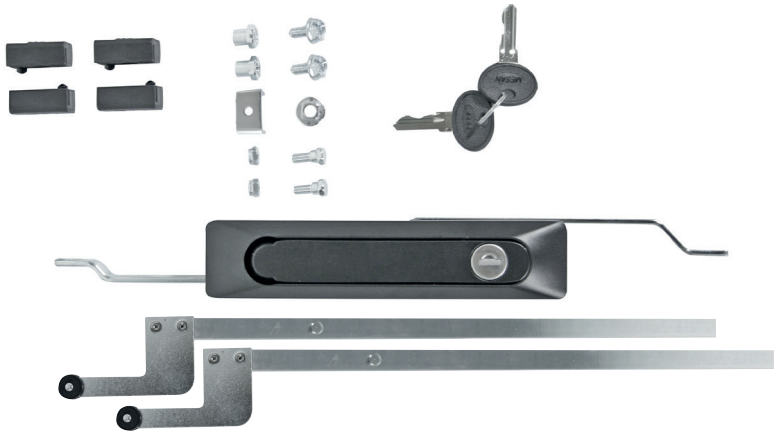

FOUR POINT LOCK FOR SINGLE CURVED PERFORATED DOOR

Material	Steel, Polyamide
Packaging	1 piece in a box
Part No	CSZ-0-YYYY0-1004

THREE POINT LOCK FOR SINGLE PERFORATED DOOR

Material	Steel, Polyamide
Packaging	1 piece in a box
Part No	CSZ-0-YYYY0-1006

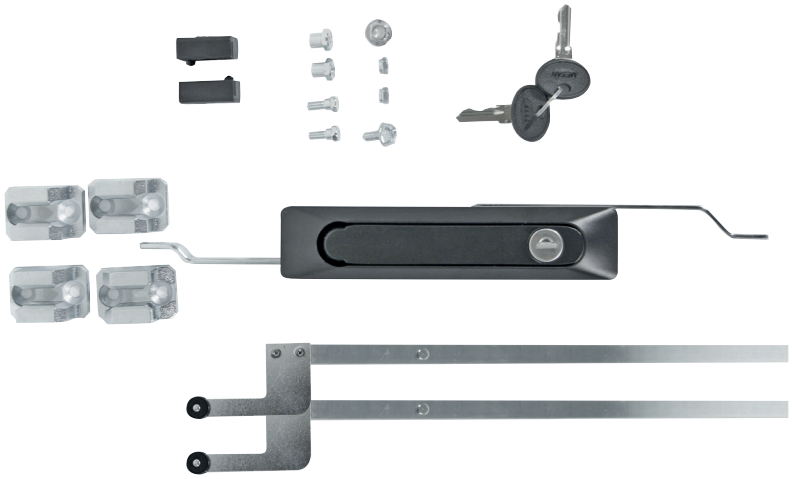

SINGLE POINT LOCK

Material	Steel, Polyamide
Packaging	1 piece in a box
Part No	CPZ-0-YYYY0-1003

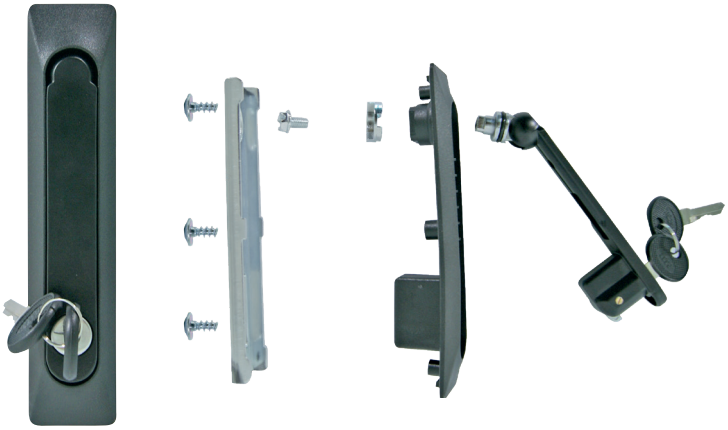

CYLINDRICAL LOCK FOR SIDE PANEL

Material	Zamak, Steel
Packaging	1 piece in a box
Part No	CPZ-0-YYYY0-1001

CYLINDRICAL LOCK FOR REAR METAL SOLID PANEL

Material	Zamak, Steel
Packaging	1 piece in a box
Part No	CPZ-0-YYYY0-1001